DADP-5037 Connection Guide

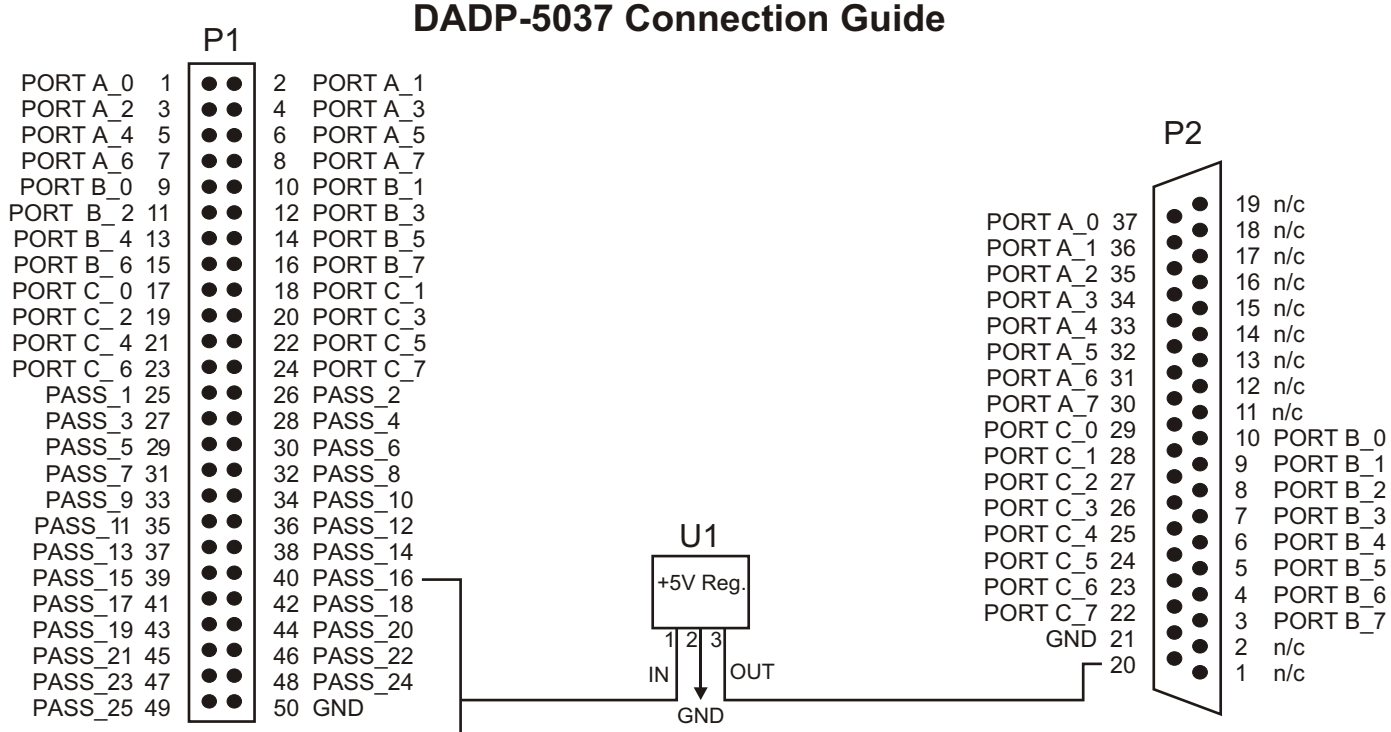

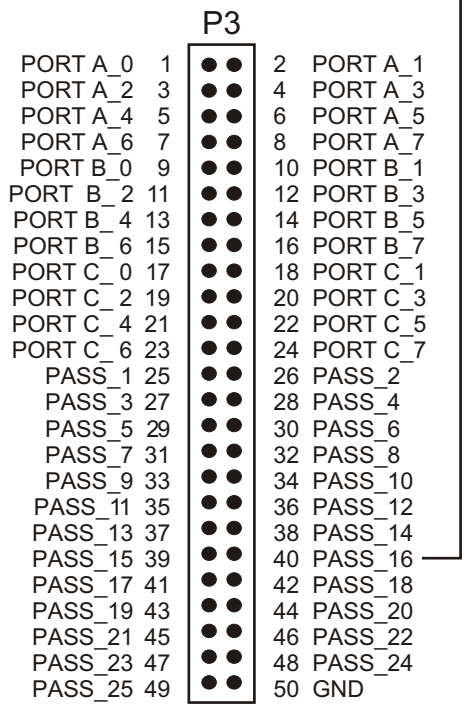

The DADP-5037 adapter board allows PCI analog I/O boards to interface and control signal conditioning and accessory boards. The DADP-5037 connects the digital I/O bits from the PCI board's 100-pin I/O connector to those external accessory and signal conditioning boards using 37D I/O-type connectors.

Notes:

- Connector P1 and P3 are wired 1:1, which allows either connector to be used as the main interface between the PCI board and the DADP-5037. The unused 50-pin connector can be used for applications that require you to monitor the I/O signals of the connector in use. Consult your DAS manual's I/O connector pin assignment section to verify which signals are available at the connector being monitored.

- Position U1 is reserved for the installation of a voltage regulator (MCC p/n TN-MC78M05CT). The voltage regulator should only be used with accessory boards that are powered through the 37D connector, such as the SSR-RACK08 board.

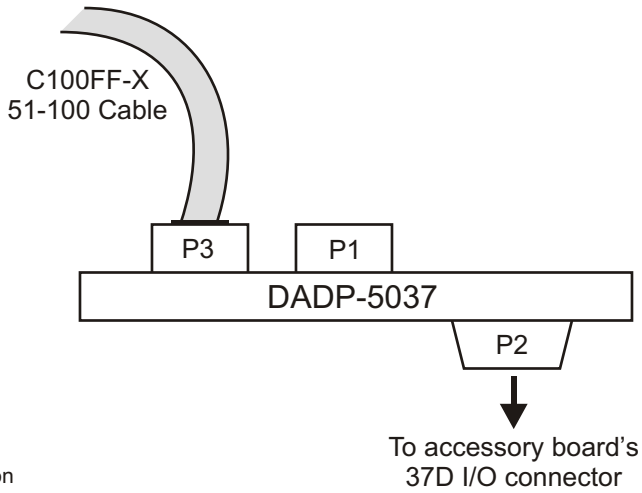

© 2003 Measurement Computing Corporation